ROYAL ENFIELD
Genuine Motorcycle Accessory Instructions

Tubeless Wheels Kit

Part Number:
KXA00453
KXA00455
KXA00456

Models:
Himalayan (452cc only)

WARNING: Royal Enfield genuine accessories are designed to fit only the specific Royal Enfield motorcycle(s) that are specified above. They should not be fitted to any other type of motorcycle. Pay particular attention to the warnings and cautions contained in this instruction, failure to do so may result in an incorrect installation of the accessory which could result in an unsafe riding condition and possible accident. If in any doubt always seek help from your authorised Royal Enfield dealer.

WARNING: Before starting any accessory kit installation ensure the motorcycle is supported in a stable condition. Failure to support the motorcycle correctly could lead to motorcycle damage or personal injury.

WARNING: All fixings must be tightened to the torque values specified in this instruction. Failure to tighten fixings to the correct torque could result in an unsafe riding condition and possible accident

CAUTION: Care should be taken when fitting any accessory kit. Incorrect handling of kit components or the use of incorrect tools could lead to component or motorcycle damage.

NOTE: The content of this instruction is subject to change at any time without notice or liability. Royal Enfield reserves the right to revise the information presented at any time.

WARNING: Throughout this operation, make sure that the motorcycle is stabilised and adequately supported to prevent risk of injury from the motorcycle falling.

WARNING: Tyre removal and fitment should only be carried out by competent technicians and inflated to recommended pressures as described in the owner's manual. Wheels should be dynamically balanced after tyre fitment.

© 2024 Royal Enfield

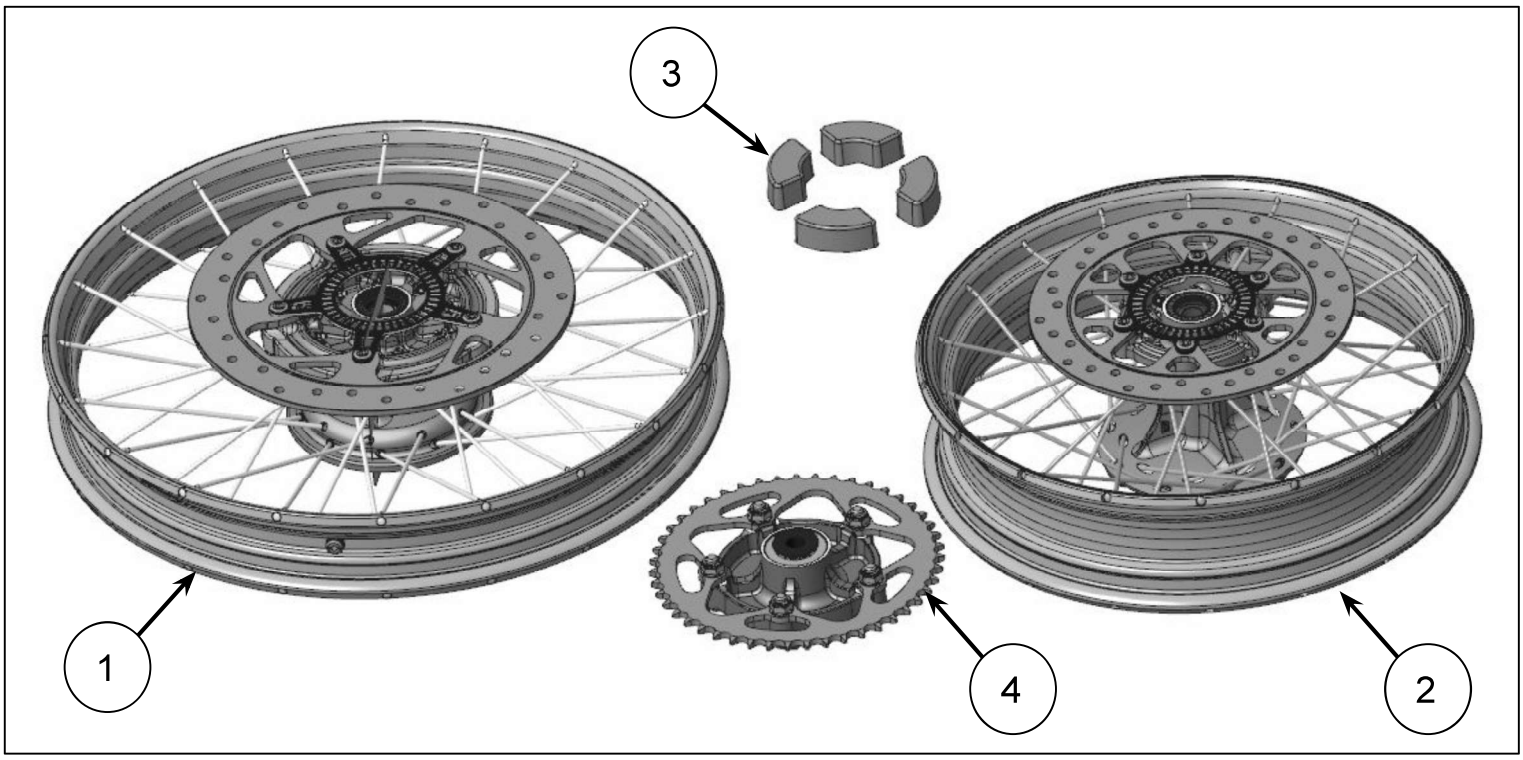

Item	Description	Qty
1	Front wheel	1
2	Rear wheel	1
3	Cush rubber	4
4	Sprocket	1

© 2024 Royal Enfield

1 Remove the front wheel as described in the Owner's manual.



2 Remove the tyre (1) from the rim (2).

Retain the tyre for reuse. Retain the rim and inner tube for reuse if the motorcycle is to be returned to its original condition.

Note: Tyre fitment should be carried out by a professional.

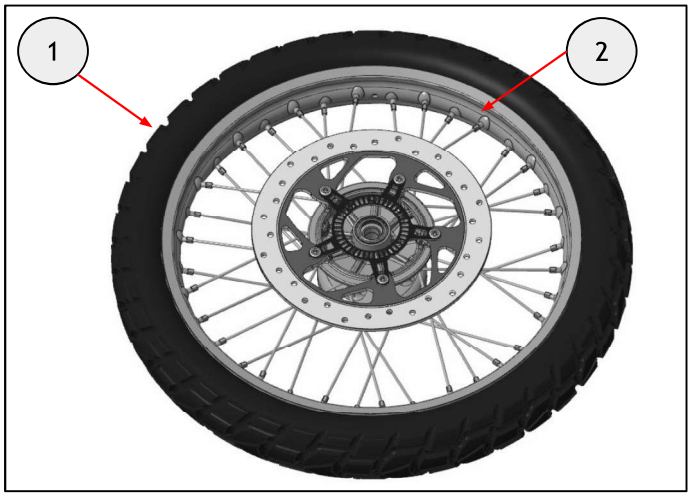

3 Fit the tyre (1) on the new wheel (2). The tyre rotation arrow should be pointing forward.

Note: Tyre fitment should be carried out by a professional. The tyre must be inflated to recommended pressure as described in the Owner's manual and wheel balancing is required.

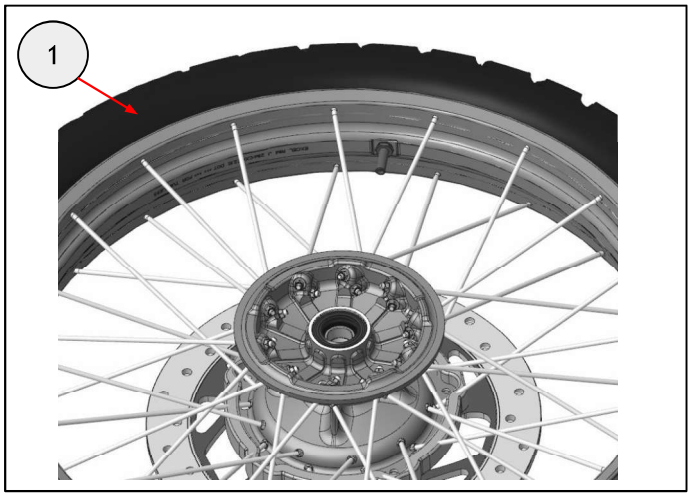

4 Reassemble the front wheel as described in the Owner's manual.

Note: Ensure the wheels are cleaned regularly with a non abrasive cleaner.



© 2024 Royal Enfield

5 Remove the rear wheel as described in the Owner's manual.



6 Remove the tyre (1) from the rim (2).

Retain the tyre for reuse. Retain the rim and inner tube for reuse if the motorcycle is to be returned to its original condition.

Note: Tyre fitment should be carried out by a professional.

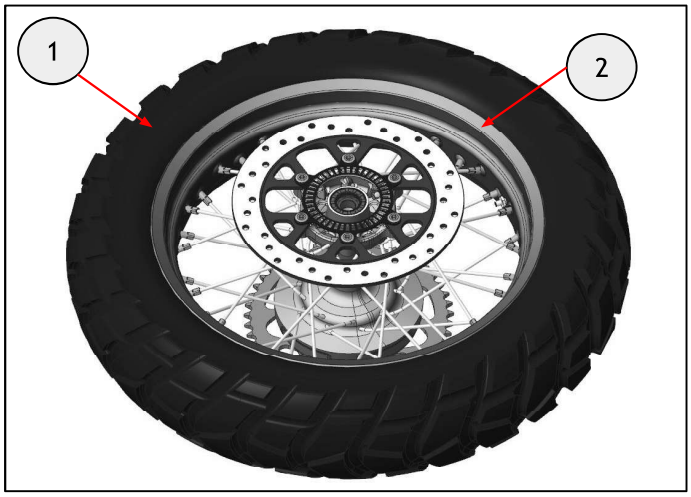

7 Fit the tyre (1) on the new wheel (2). The tyre rotation arrow should be pointing forward.

Note: Tyre fitment should be carried out by a professional. The tyre must be inflated to recommended pressure as described in the Owner's manual and wheel balancing is required.

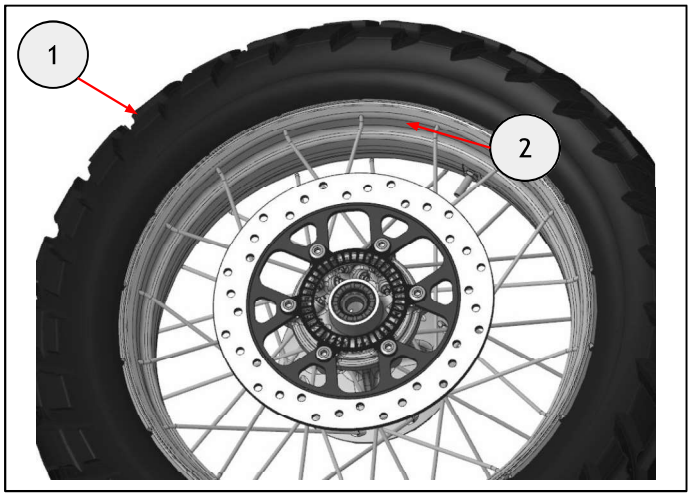

8 Fit the four cush rubbers from the kit (1) to the hub.

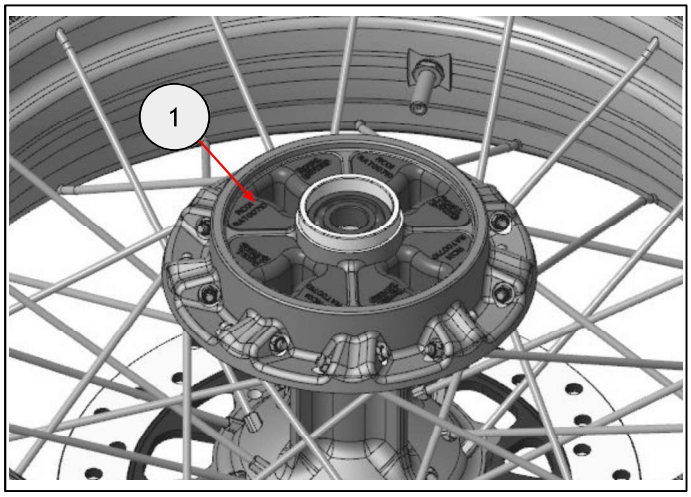

© 2024 Royal Enfield

9 Push the sprocket assembly (1) from the kit into the cush rubbers (2).

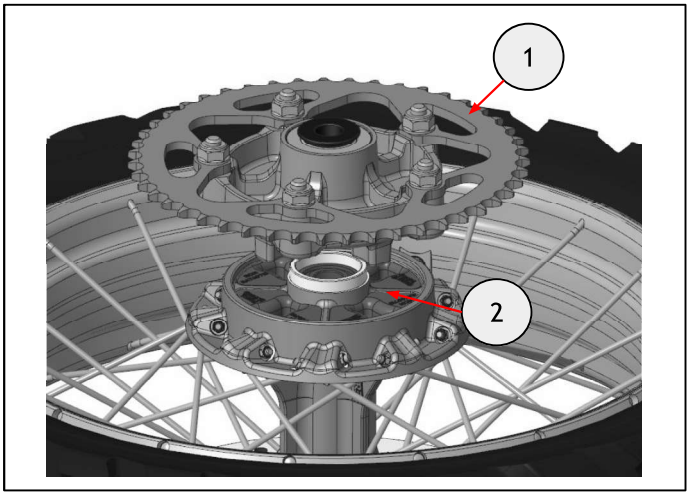

10 Reassemble the rear wheel as described in the Owner's manual.

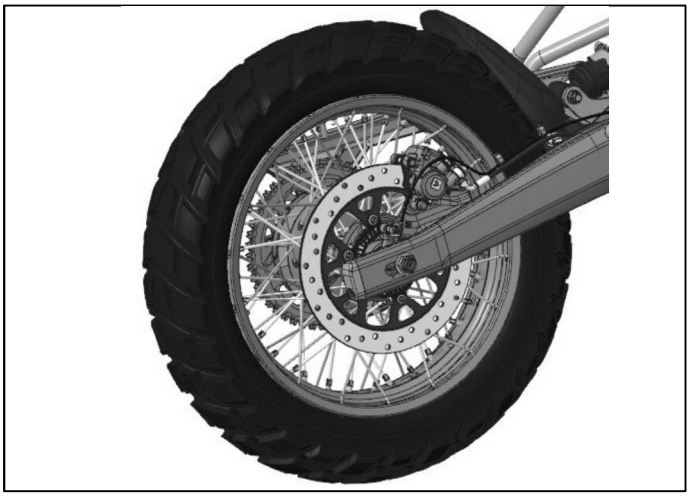

11 Check and adjust the chain tension as described in the Owner's manual.

Note: Ensure the wheels are cleaned regularly with a non abrasive cleaner.

WARNING: After fitting any genuine Royal Enfield accessory always ride the motorcycle with caution and allow time to become familiar with any change in the motorcycle handling characteristics. Failure to become familiar with any change in the motorcycle handling characteristics may cause the motorcycle to become unstable and result in an accident.

© 2024 Royal Enfield