Accessory Fitting Instructions

Thank you for choosing this Triumph genuine accessory kit. This accessory kit is the product of Triumph's use of proven engineering, exhaustive testing, and continuous striving for superior reliability, safety and performance.

Completely read all of these instructions before commencing the installation of the accessory kit in order to become thoroughly familiar with the kit's features and the installation process.

These instructions should be considered a permanent part of your accessory kit, and should remain with it even if your accessory equipped motorcycle is subsequently sold.

Coated Screen Kit	
Kit Number	**Models**
36TA0040	Speed 400
To be used with the screen fitting kit below:	
Screen Fitting Kit	
Kit Number	**Models**
36TA0147	Speed 400
Front Plate Fitting Kit	
Kit Number	**Models**
36TA0059	Speed 400

Parts Supplied 36TA0040:

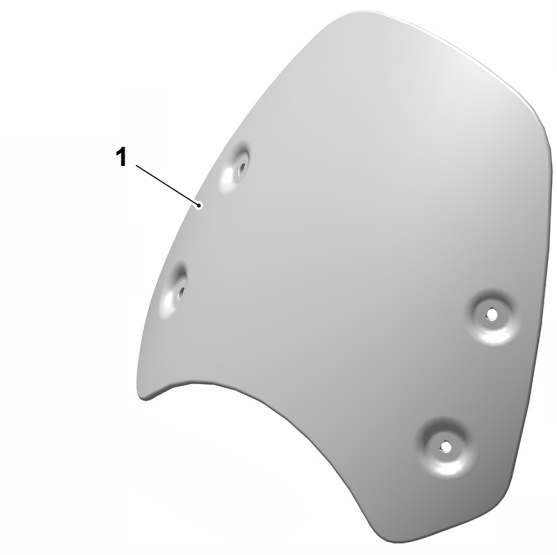

1.	Coated Screen	1 off

© Triumph Designs Ltd. 2024

Parts Supplied: 36TA0147

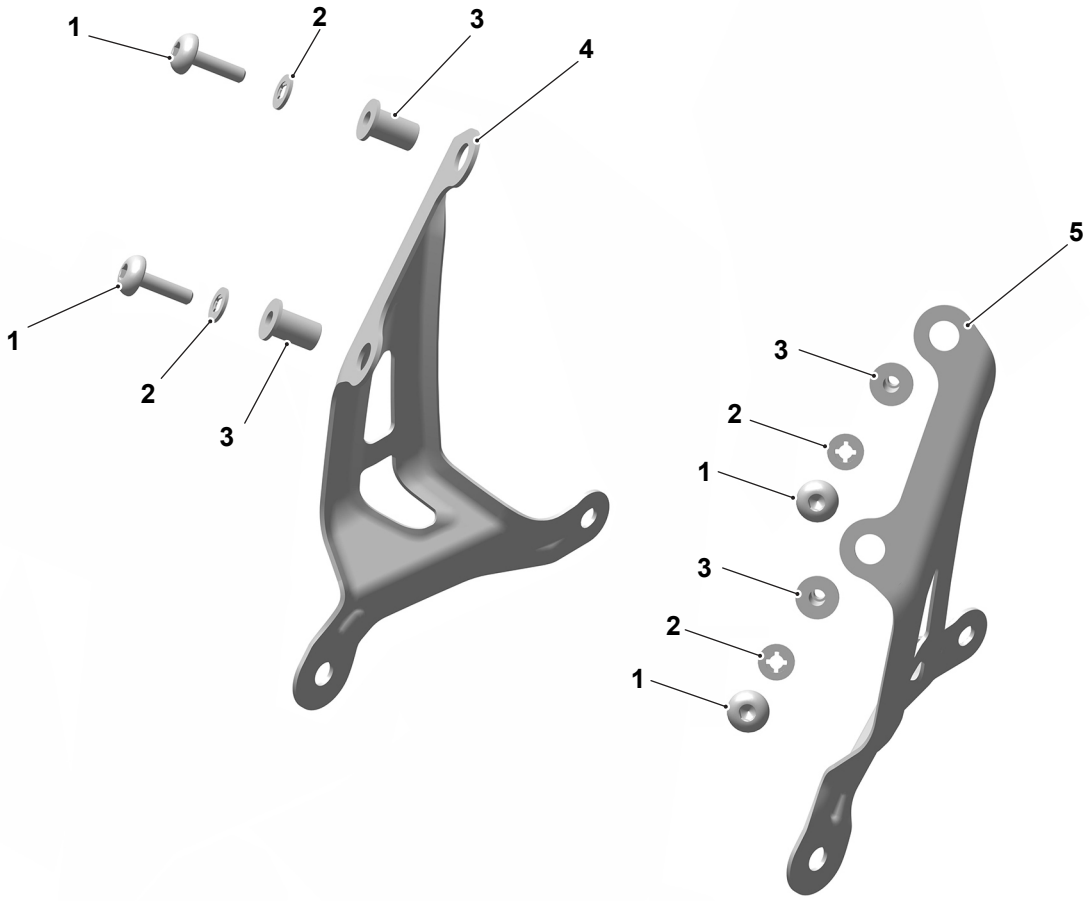

1. Fixing (M5 x 16 mm)	4 off	4. Right screen bracket	1 off
2. Washers	4 off	5. Left screen bracket	1 off
3. Well-Nuts	4 off		

Parts Supplied: 36TA0059

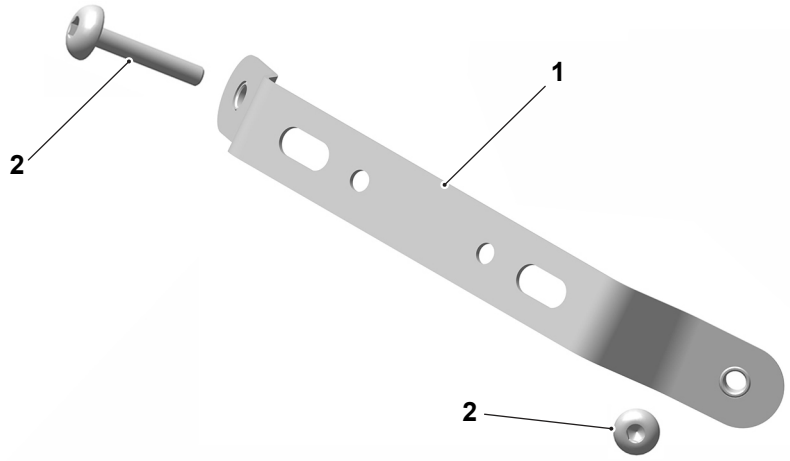

1. Front Number Plate Bracket	1 off
2. Fixing (M5 x 25 mm)	2 off

⚠ WARNING

Fit only genuine Triumph accessories to those models approved by Triumph as listed in the associated Triumph fitting instructions.

The accessory kits covered in this instruction are designed for use on specific models of Triumph motorcycle. The accessory kits and the models applicable are listed at the start of the instruction. They should never be fitted to any other Triumph model or to any other manufacturer's motorcycle.

Fitting an accessory kit to a Triumph model not listed, or to any other manufacturer's motorcycle, will affect the performance, stability and handling of the motorcycle.

Failure to follow the advice above may lead to loss of motorcycle control which could result in serious injury or death.

⚠ WARNING

Always have Triumph approved parts, accessories and conversions fitted by a competent person with the specialist knowledge and technical understanding of motorcycles, such as an authorised Triumph dealer.

The fitment of parts, accessories and conversions by a person without the specialist knowledge and technical understanding of motorcycles may affect the handling, stability or other aspects of the motorcycle's operation.

Failure to follow the advice above may lead to loss of motorcycle control which could result in serious injury or death.

⚠ WARNING

A torque wrench of known accurate calibration must be used when fitting this accessory kit.

Failure to tighten any of the fasteners to the correct torque specification may affect motorcycle performance, handling and stability.

Failure to follow the advice above may lead to loss of motorcycle control which could result in serious injury or death.

⚠ WARNING

Make sure the motorcycle is stabilised and adequately supported.

Do not support the motorcycle on any ancillary component, the exhaust system or any other non structural parts of the motorcycle frame.

A correctly supported motorcycle will help prevent it from falling.

An unstable motorcycle may fall resulting in motorcycle damage, serious injury or death.

NOTICE

Triumph offers a broad range of approved genuine accessories for your motorcycle.

We cannot therefore cover all possible equipment variations in these instructions. For removal and installation of Triumph Genuine Accessories, always refer to the instructions supplied with the respective accessory kit.

To obtain additional copies of any Triumph accessory instructions, visit www.triumphinstructions.com or contact your authorised Triumph dealer.

1. Disconnect the battery as described in the Service Manual.
2. Remove the headlight as described in the Service Manual.
3. Remove the M6 x 18 mm fixing from each side that attaches the licence plate bracket (if fitted) and the headlamp brackets to the holder brackets.

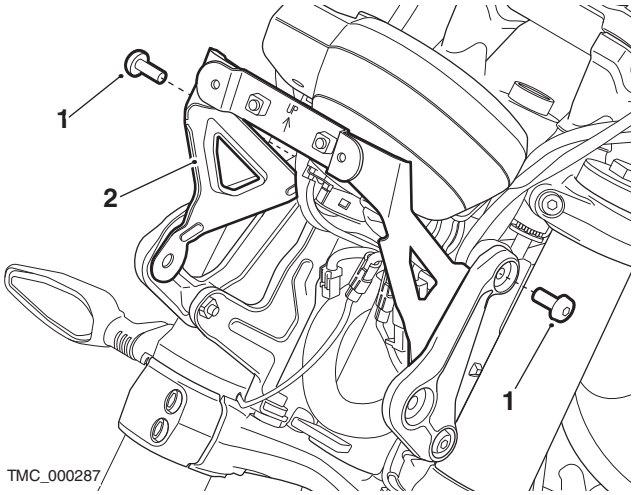

1. M6 x 18 mm fixing
2. Front licence plate bracket (where fitted)

4. Remove the licence plate bracket.

5. Install two of the Well-Nuts from the kit into each of the two screen brackets from the kit.

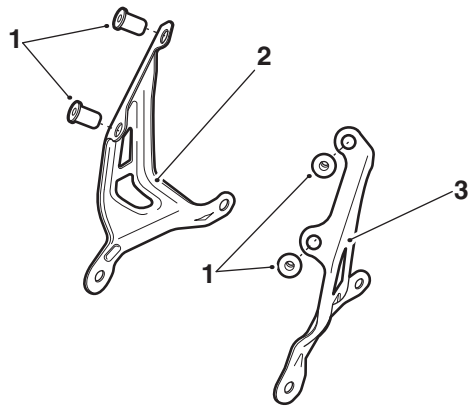

TMC_000291

1. **Well-Nuts**
2. **Right screen bracket**
3. **Left screen bracket**

6. Fit the left and right screen brackets between the headlamp brackets and the holder brackets.

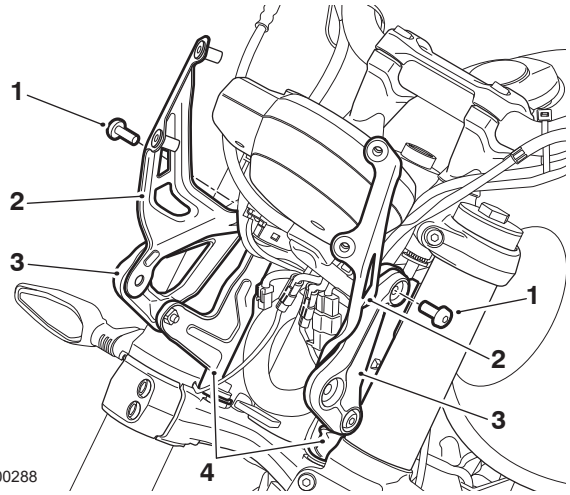

TMC_000288

1. **M6 x 18 mm fixings**
2. **Screen brackets**
3. **Headlamp brackets**
4. **Holder brackets**

7. Install the two original M6 x 18 mm fixings and tighten to 4.5 Nm .
8. Refit the headlight as described in the Service Manual.

9. Position the screen and install two upper M5 x 16 mm fixings and washers from the kit. Do not fully tighten at this stage.

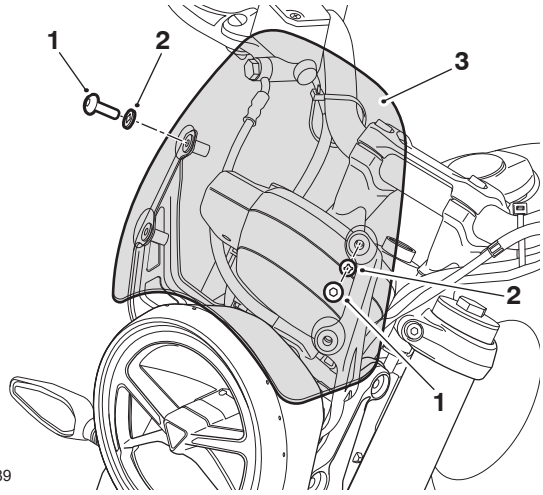

TMC_000289

1. **Fixing (M5 x 16 mm)**
2. **Washer**
3. **Screen**

10. If kit 36TA0059 is not to be fitted, install the two M5 x 16 mm fixings and washers from the kit into the bottom mounting holes. Do not tighten at this stage.

Installation of Front Licence Plate Bracket (Kit 36TA0059)

11. Position the front licence plate bracket from 36TA0059 with the two washers from kit 36TA0041 first, onto the screen at the bottom fixing points.

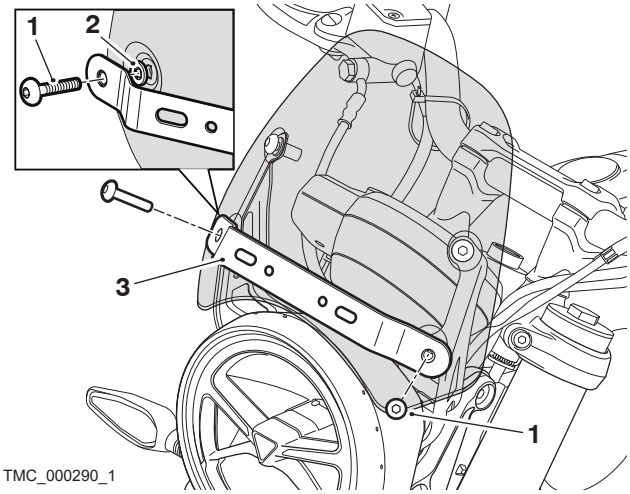

TMC_000290_1

1. **Fixing (M5 x 25 mm)**
2. **Washer**
3. **Front licence plate bracket**

12. Install the two M5 x 25 mm fixings from the kit to attach the bracket to the screen. Do not fully tighten at this stage.

All models

13. Tighten the four M5 fixings to 0.6 Nm.

14. Connect the battery as described in the Service Manual.

⚠ WARNING

After fitting the accessory kit the motorcycle will exhibit new handling characteristics.

Operate the motorcycle in a safe area free from traffic to gain familiarity with any new characteristics.

Operation of the motorcycle when not familiar with any new handling characteristics may lead to loss of motorcycle control which could result in serious injury or death.

⚠ WARNING

If, after fitting this accessory kit, you have any doubt about the performance of any aspect of the motorcycle, contact a competent person with the specialist knowledge and technical understanding of motorcycles, such as an authorised Triumph dealer.

Riding a motorcycle when there is any doubt as to any aspect of the performance of the motorcycle may lead to loss of motorcycle control which could result in serious injury or death.

⚠ WARNING

Never ride an accessory-equipped motorcycle at speeds above 80 mph (130 km/h).

Remember that the 80 mph (130 km/h) limit will be reduced by the fitting of non-approved accessories, incorrect loading, worn tyres, overall motorcycle condition and poor road or weather conditions.

The presence of accessories will cause changes in the stability and handling of the motorcycle. Failure to allow for changes in motorcycle stability may lead to loss of motorcycle control which could result in serious injury or death.

⚠ WARNING

High-speed operation should only be attempted by riders who have been instructed in the techniques necessary for high-speed riding and are familiar with the motorcycle's characteristics in all conditions.

Only operate this Triumph motorcycle at high speed in closed-course, on-road competition or on closed-course racetracks.

High-speed operation in any other circumstances is dangerous and may lead to loss of motorcycle control which could result in serious injury or death.

NOTICE

The motorcycle must not be operated above the legal road speed limit except in closed-course conditions.