ROYAL ENFIELD
Genuine Motorcycle Accessory Instructions

Soft Pannier Rails

Part Number:
KXA00257

Models: SUPER METEOR 650
SHOTGUN 650
CLASSIC 650

WARNING: Royal Enfield genuine accessories are designed to fit only the specific Royal Enfield motorcycle(s) that are specified above. They should not be fitted to any other type of motorcycle. Pay particular attention to the warnings and cautions contained in this instruction, failure to do so may result in an incorrect installation of the accessory which could result in an unsafe riding condition and possible accident. If in any doubt always seek help from your authorised Royal Enfield dealer.

WARNING: Before starting any accessory kit installation ensure the motorcycle is supported in a stable condition. Failure to support the motorcycle correctly could lead to motorcycle damage or personal injury.

WARNING: All fixings must be tightened to the torque values specified in this instruction. Failure to tighten fixings to the correct torque could result in an unsafe riding condition and possible accident

CAUTION: Care should be taken when fitting any accessory kit. Incorrect handling of kit components or the use of incorrect tools could lead to component or motorcycle damage.

NOTE: The content of this instruction is subject to change at any time without notice or liability. Royal Enfield reserves the right to revise the information presented at any time.

© 2025 Royal Enfield

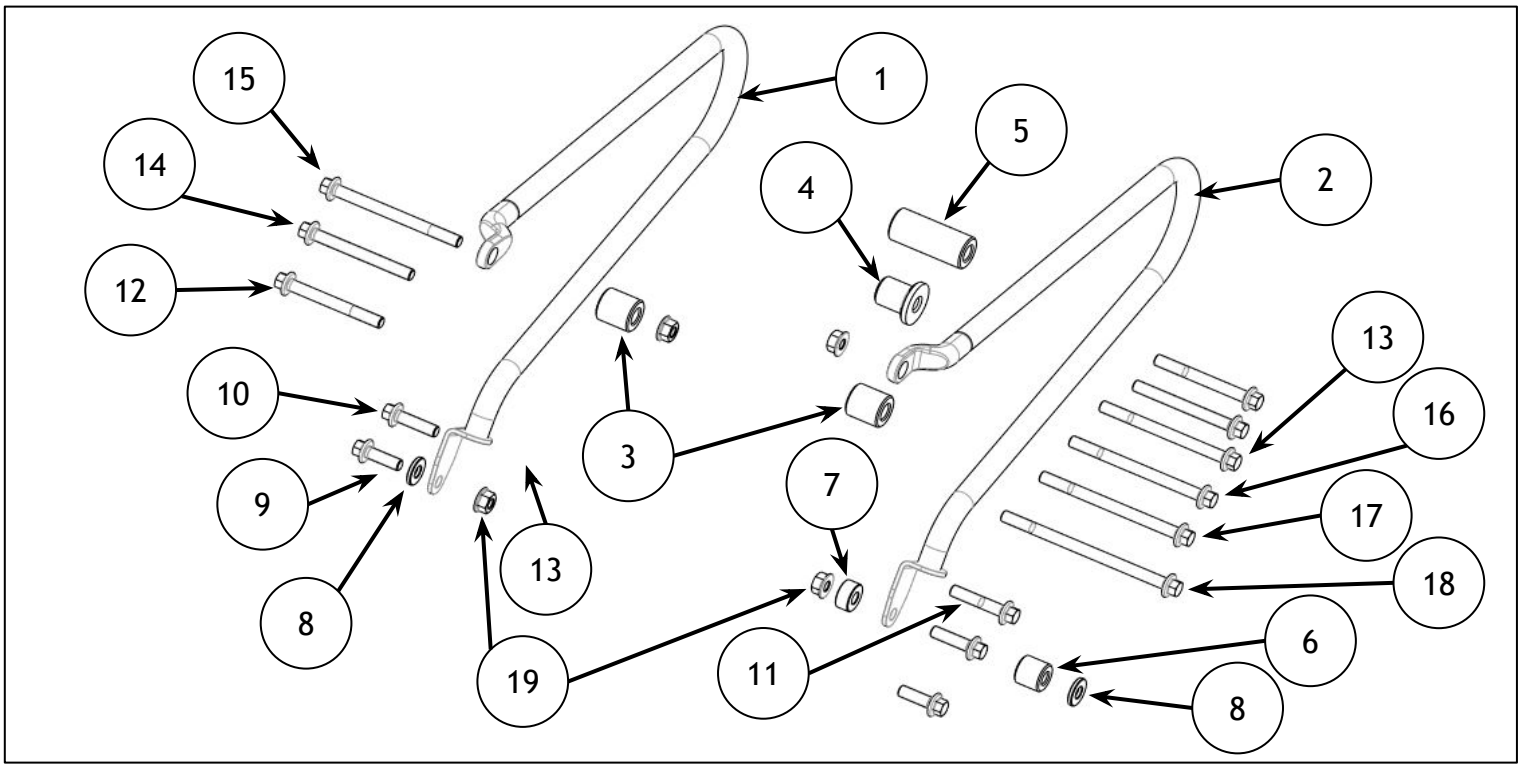

		Super Meteor 650	Shotgun 650	Classic 650
Item	**Description**	**QTY**		
1	Pannier rail, right hand	1	1	1
2	Pannier rail, left hand	1	1	1
3	Spacer boss, 24mm	2	2	1
4	Top hat spacer boss		1	1
5	Spacer boss, 55mm	1		1
6	Spacer boss, 18mm	1	1	
7	Spacer boss, 9mm			1
8	Spacer boss, 3mm			2
9	Fixing, M8 x 25 mm	2	1	
10	Fixing, M8 x 30 mm			2
11	Fixing, M8 x 40 mm	1	1	1
12	Fixing, M8 x 70 mm	2		
13	Fixing, M8 x 75 mm			1
14	Fixing, M8 x 80 mm			1
15	Fixing, M8 x 95 mm		2	
16	Fixing, M8 x 100 mm	1		
17	Fixing, M8 x 105 mm			1
18	Fixing, M8 x 125 mm		1	
19	Nut, M8	4	2	2

© 2025 Royal Enfield

Super Meteor Model Only – Right hand side

1 Fit a 24mm spacer boss (1) from the kit into the recess in the motorcycle frame (2).

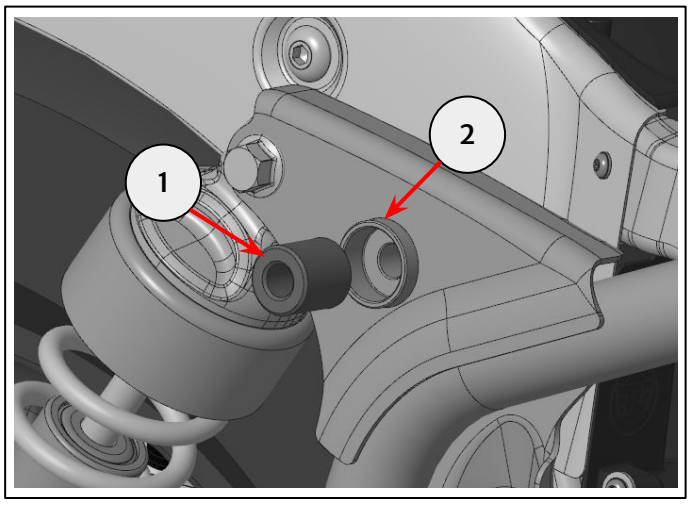

2 Fix the right hand pannier rail upper mount (1) to the 24mm spacer boss (2) and motorcycle frame (3) using an M8 x 70mm fixing (4) and M8 nut (5) from the kit.

Do not tighten the fixing at this stage.

	10mm socket and ratchet 13mm spanner

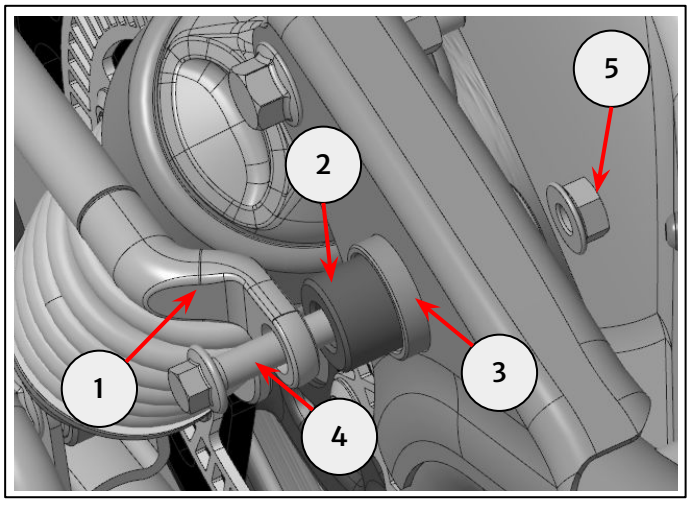

3 Fix the right hand pannier rail lower mount (1) with the bracket on the motorcycle frame (2). Using an M8 x 25mm fixing (3) and M8 nut (4) from the kit.

Tighten the upper and lower pannier rail fixings to **30 Nm**.

	10mm socket and torque wrench 13mm spanner

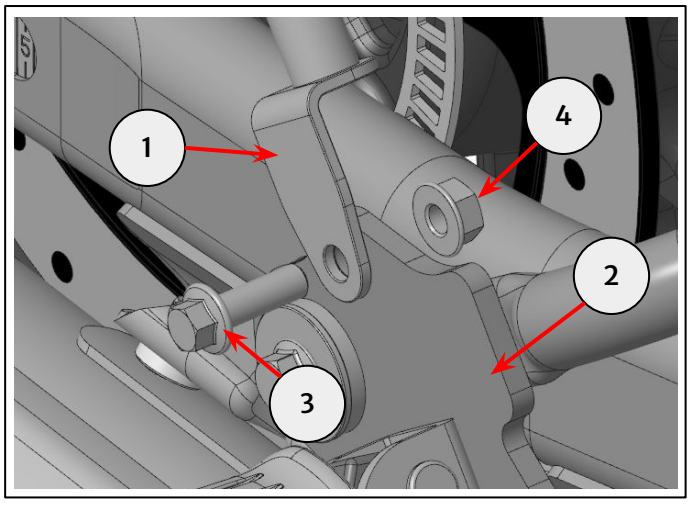

WARNING: After fitting any genuine Royal Enfield accessory always ride the motorcycle with caution and allow time to become familiar with any change in the motorcycle handling characteristics. Failure to become familiar with any change in the motorcycle handling characteristics may cause the motorcycle to become unstable and result in an accident.

© 2025 Royal Enfield

Super Meteor Model Only –
Left hand side with Saree Guard

4 Remove the fixings (1) from the rear frame lower bracket (2) securing the Saree Guard (3). Retain fixings (1) for reuse if the motorcycle is to be returned to its original condition.

	10mm socket and ratchet 13mm spanner

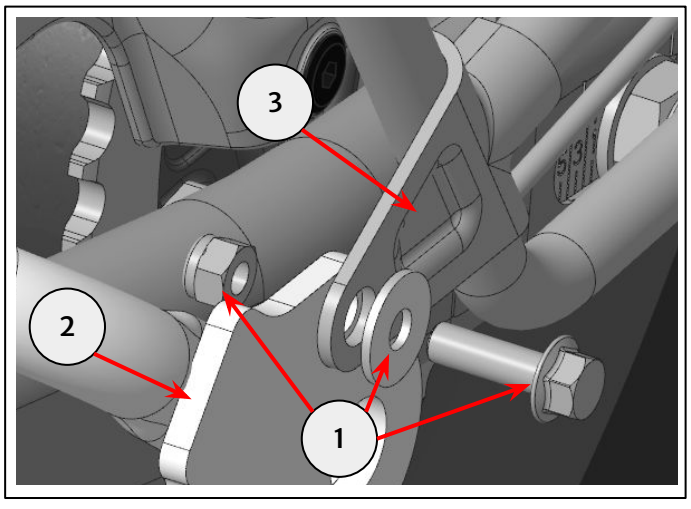

5 Fit a 55mm spacer boss (1) from the kit into the recess in the motorcycle frame (2).

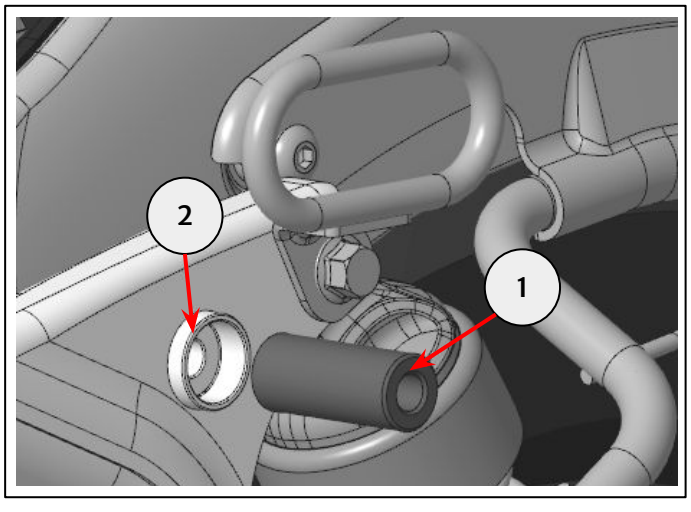

6 Fix the left hand pannier rail upper mount (1) to the motorcycle frame (2), with the 55mm spacer boss (3) using an M8 x 100mm fixing (4) and M8 nut (5) from the kit.

Do not tighten the fixing at this stage.

	10mm socket and ratchet 13 spanner

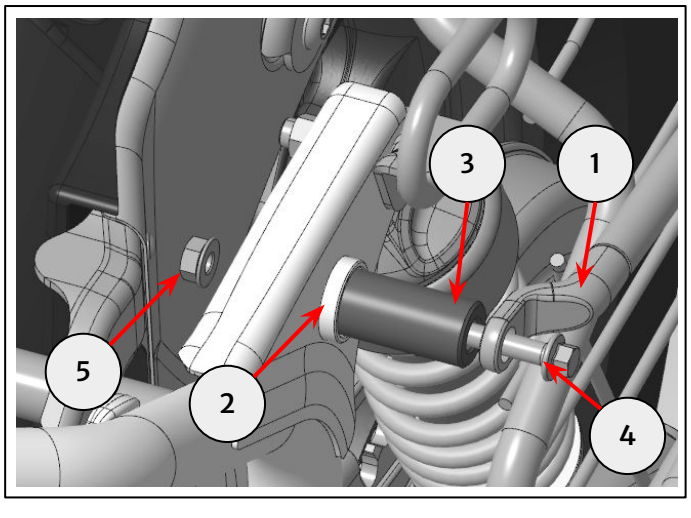

7 Fix the pannier rail lower mount (1) to the Saree Guard bracket (2) using an M8 x 25mm fixing (3) and M8 nut (4) from the kit, as shown.

Tighten the upper and lower pannier rail fixings to **30 Nm**.

	10mm socket and torque wrench 13mm spanner

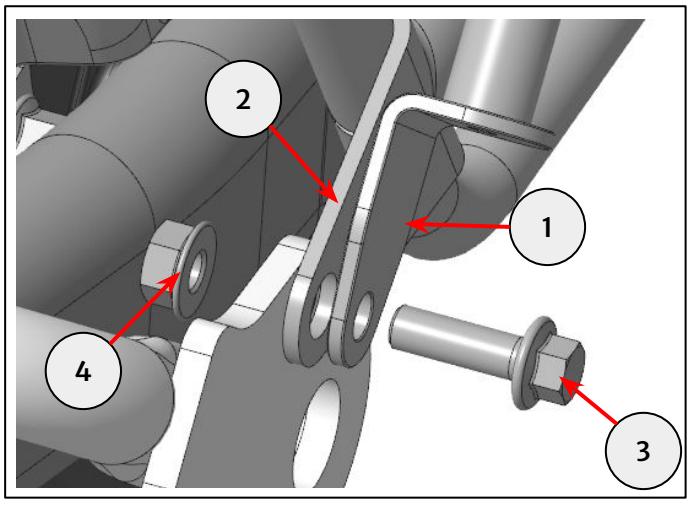

© 2025 Royal Enfield

Super Meteor Model Only –
Left hand side without Saree Guard

8 Fit a 24mm spacer boss (1) from the kit into the recess in the motorcycle frame (2).

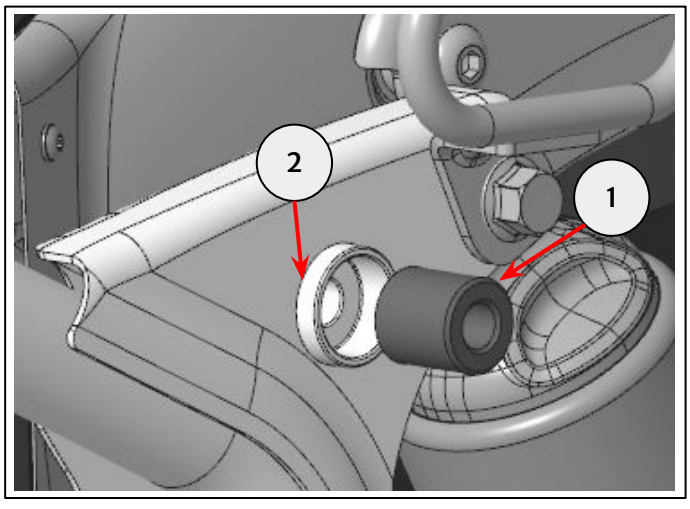

9 Fix the left hand pannier rail upper mount (1) to the 24mm spacer boss (2) and motorcycle frame (3) using an M8 x 70mm fixing (4) and M8 nut (5) from the kit.

Do not tighten the fixing at this stage.

	10mm socket and ratchet 13mm spanner

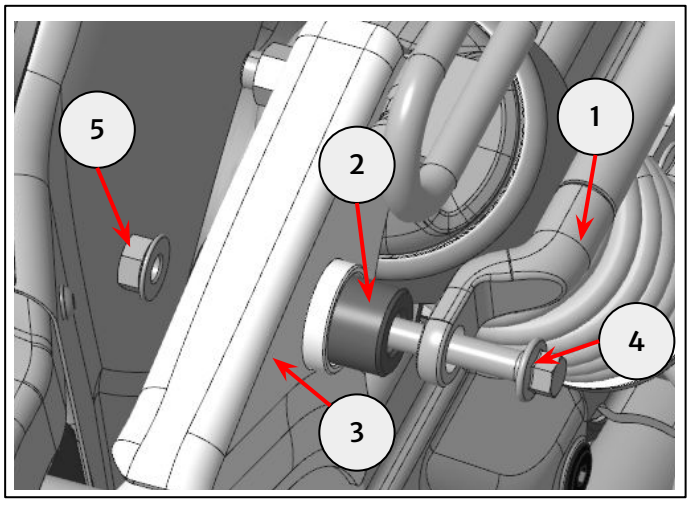

10 Fix the left hand pannier rail lower mount (1) to the bracket on the motorcycle frame (2) and an 18mm spacer boss (3), using an M8 x 40mm fixing (4) and M8 nut (5) from the kit, as shown.

Tighten the upper and lower pannier rail fixings to **30 Nm**.

	10mm socket and torque wrench 13mm spanner

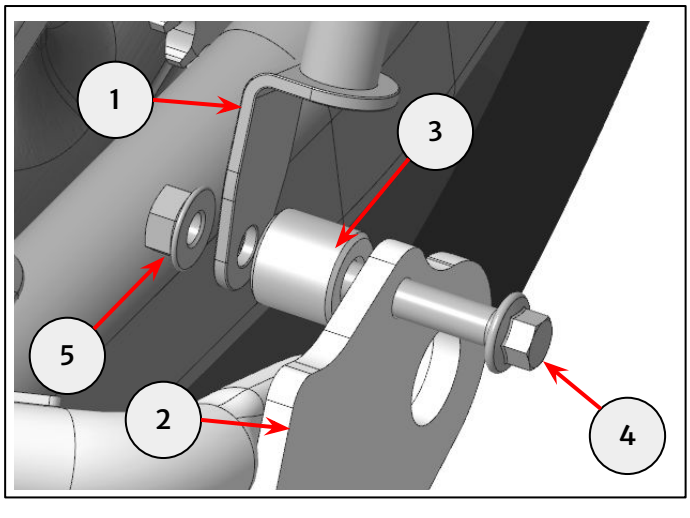

WARNING: After fitting any genuine Royal Enfield accessory always ride the motorcycle with caution and allow time to become familiar with any change in the motorcycle handling characteristics. Failure to become familiar with any change in the motorcycle handling characteristics may cause the motorcycle to become unstable and result in an accident.

© 2025 Royal Enfield

Shotgun 650 Model Only – Right hand side

11 Remove the fixing (1), nut (2) and spacer (3) from the motorcycle frame (4) as shown. Retain the nut (2) and spacer (3) for reuse. Retain the fixing (1) for reuse if the motorcycle is to be returned to its original condition.

Note: Rear wheel and RSU omitted from view for clarity

	12mm socket and ratchet 12mm spanner

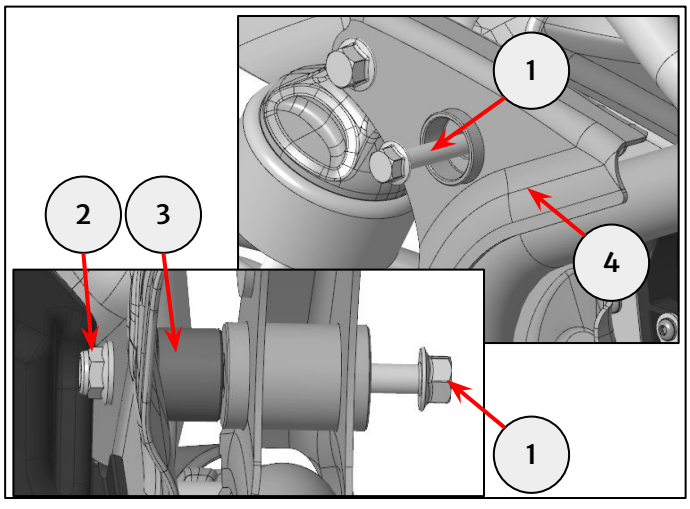

12 Fit a 24mm spacer boss (1) from the kit into the recess in the motorcycle frame (2).

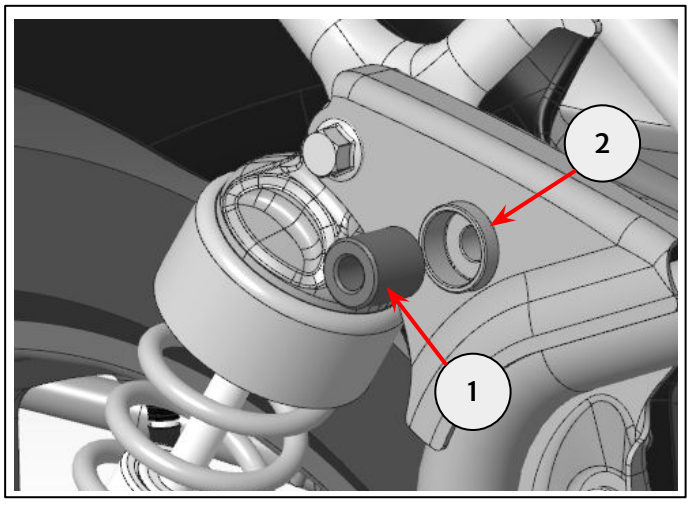

13 Fix the right hand pannier rail upper mount (1), to the 24mm spacer boss (2) and motorcycle frame (3) using an M8 x 95mm fixing (4) from the kit and the nut (5) and spacer (6) removed in step 11, as shown.

Do not tighten the fixing at this stage.

Note: Rear wheel and RSU omitted from view for clarity

	10mm socket and ratchet 13mm spanner

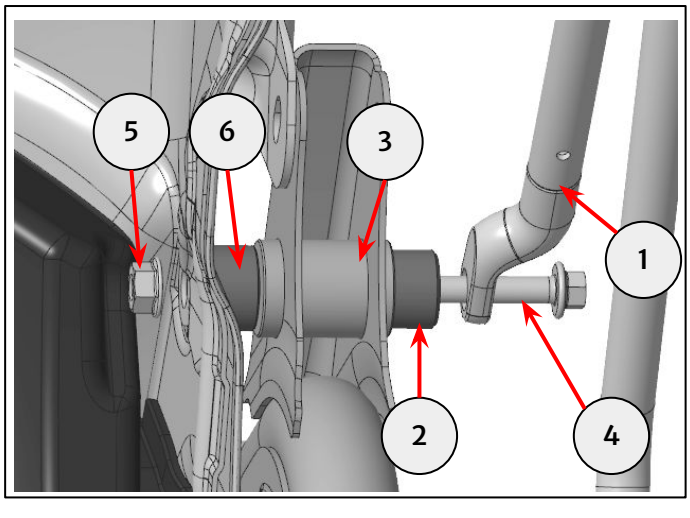

14 Fix the right hand pannier rail lower mount (1) to the bracket on the motorcycle frame (2) using an M8 x 25mm fixing (3) and M8 nut (4) from the kit, as shown.

Tighten the upper and lower pannier rail fixings to **30 Nm**.

	10mm socket and torque wrench 13mm spanner

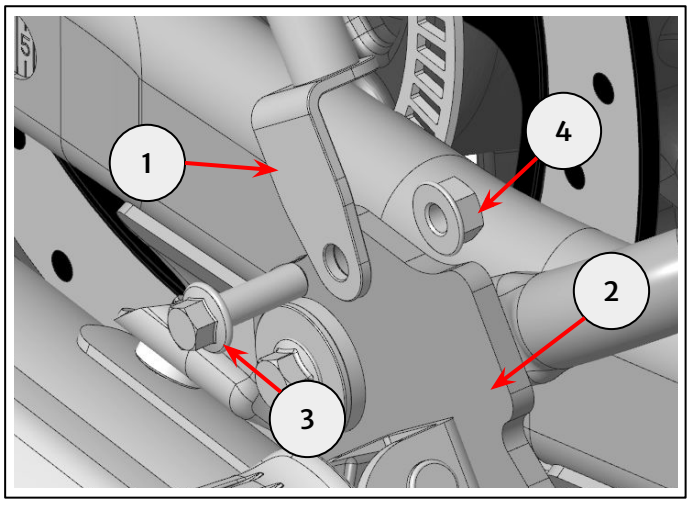

© 2025 Royal Enfield

Shotgun 650 Model Only –
Left hand side with Saree Guard

15 Remove the fixings (1) from the lower bracket (2) securing the Saree Guard (3). Retain fixings (1) for reuse if the motorcycle is to be returned to its original condition.

	12mm socket and ratchet 13mm spanner

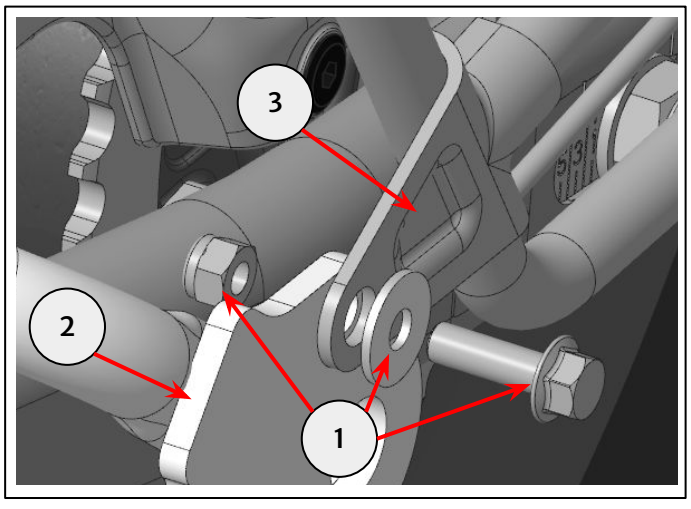

16 Remove the fixing (1), nut (2) and spacer (3) from the motorcycle frame (4) securing the Saree Guard (5) as shown. Retain the nut (2) and spacer (3) for reuse. Retain the fixing (1) for reuse if the motorcycle is to be returned to its original condition.

Note: Rear wheel and RSU omitted from view for clarity

	12mm socket and ratchet 12mm spanner

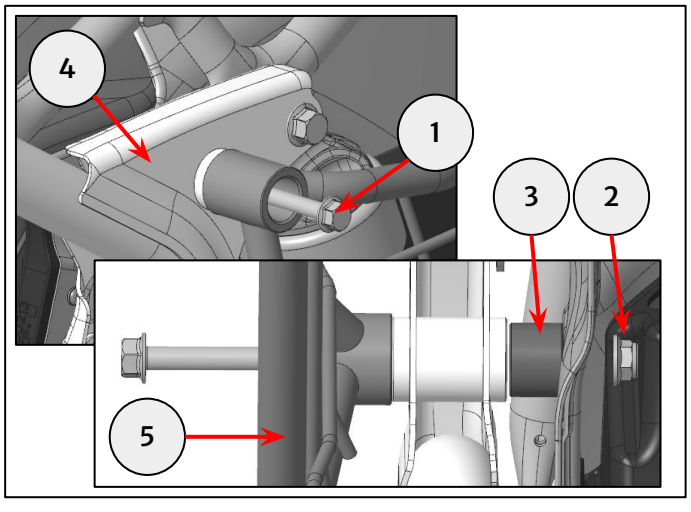

17 Fit the top hat spacer boss (1) from the kit into the recess in the Saree Guard (2).

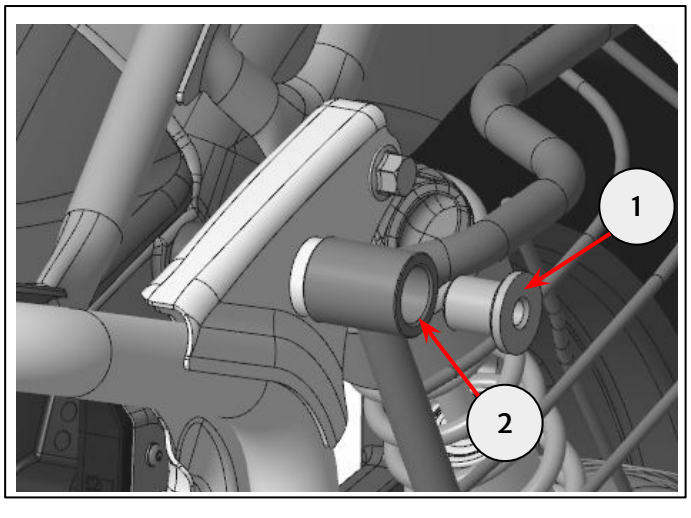

18 Fix the left hand pannier rail upper mount (1), with the top hat spacer boss (2) to the motorcycle frame (3) using an M8 x 125mm fixing (4) from the kit and reuse the nut (5) and spacer (6) removed in step 16.

Do not tighten the fixing at this stage.

Note: Rear wheel and RSU omitted from view for clarity

	10mm socket and ratchet 13mm spanner

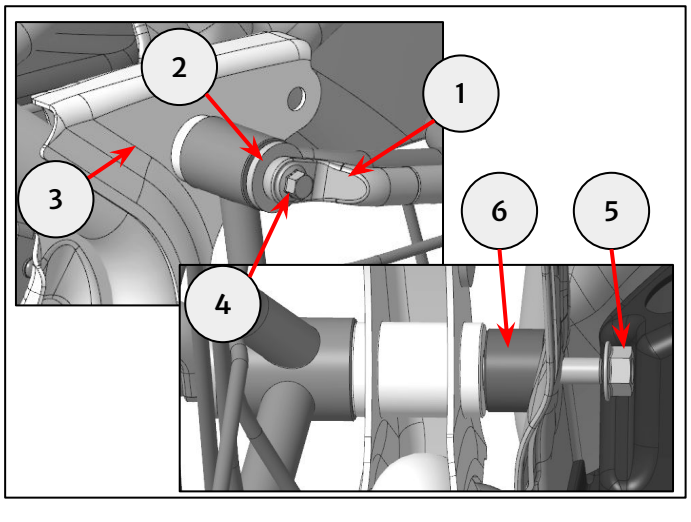

© 2025 Royal Enfield

19 Fix the pannier rail lower mount (1) to the Saree Guard bracket (2) and the motorcycle frame (3), using an M8 x 25mm fixing (4) and M8 nut (5) from the kit, as shown.

Tighten the upper and lower pannier rail fixings to **30 Nm**.

	10mm socket and torque wrench 13mm spanner

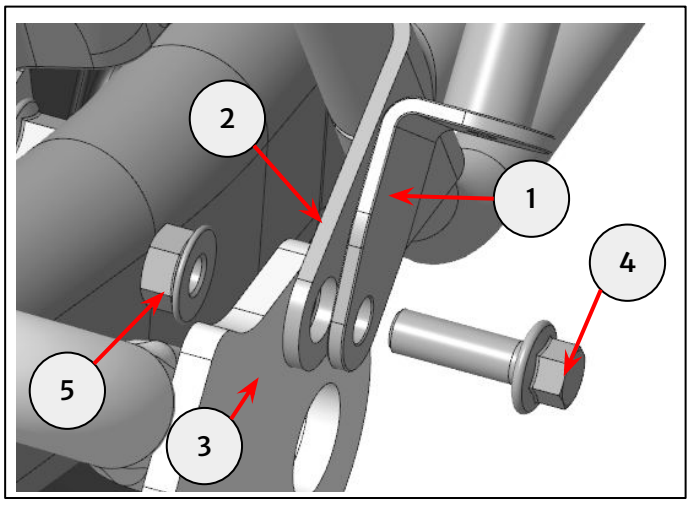

Shotgun 650 Model Only – Left hand side without Saree Guard

20 Remove the fixing (1), nut (2) and spacer (3) from the motorcycle frame (4) as shown. Retain the nut (2) and spacer (3) for reuse. Retain the fixing (1) for reuse if the motorcycle is to be returned to its original condition.

Note: Rear wheel and RSU omitted from view for clarity

	12mm socket and ratchet 12mm spanner

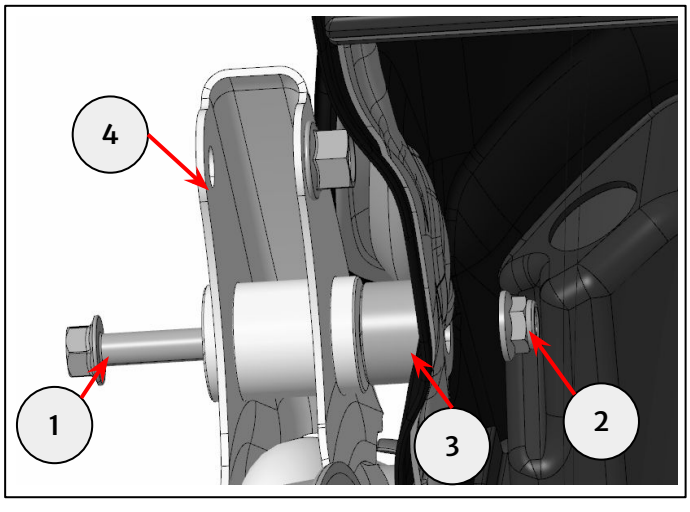

21 Fit a 24mm spacer boss (1) from the kit into the recess in the motorcycle frame (2).

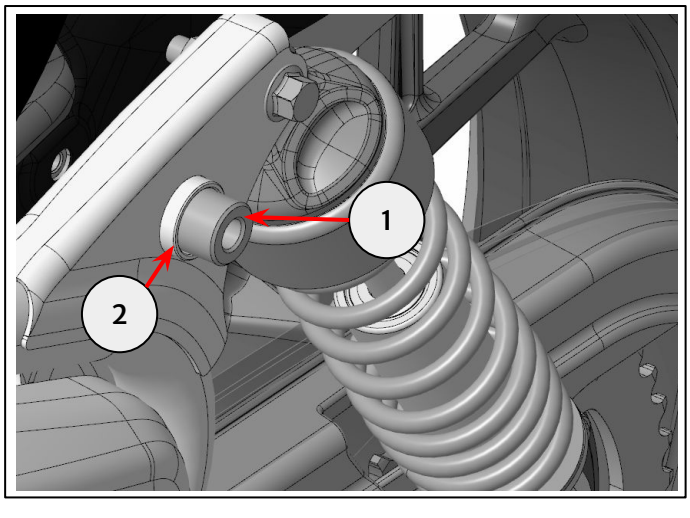

22 Fix the left hand pannier rail upper mount (1), to the 24mm spacer boss (2) and motorcycle frame (3) using an M8 x 95mm fixing (4) from the kit, the nut (5) and spacer (6) removed in step 20, as shown.

Do not tighten the fixing at this stage.

Note: Rear wheel and RSU omitted from view for clarity

	10mm socket and ratchet 13mm spanner

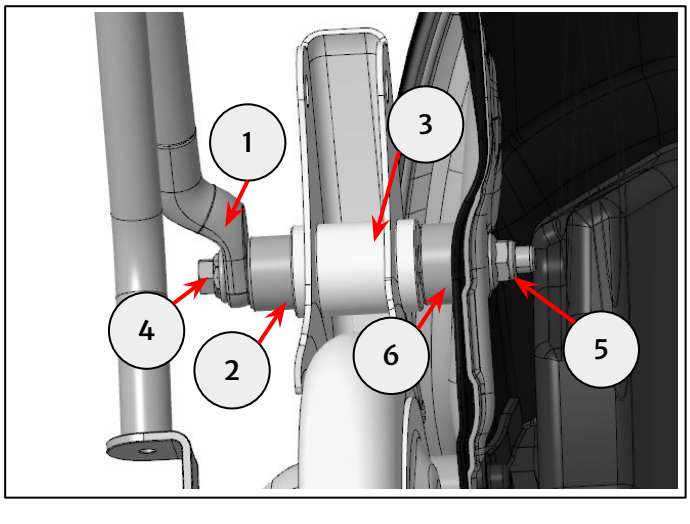

© 2025 Royal Enfield

23 Fix the left hand pannier rail lower mount (1) to the bracket on the motorcycle frame (2) and an 18mm spacer boss (3), using an M8 x 40mm fixing (4) and M8 nut (5) from the kit, as shown.

Tighten the upper and lower pannier rail fixings to **30 Nm**.

	10mm socket and torque wrench 13mm spanner

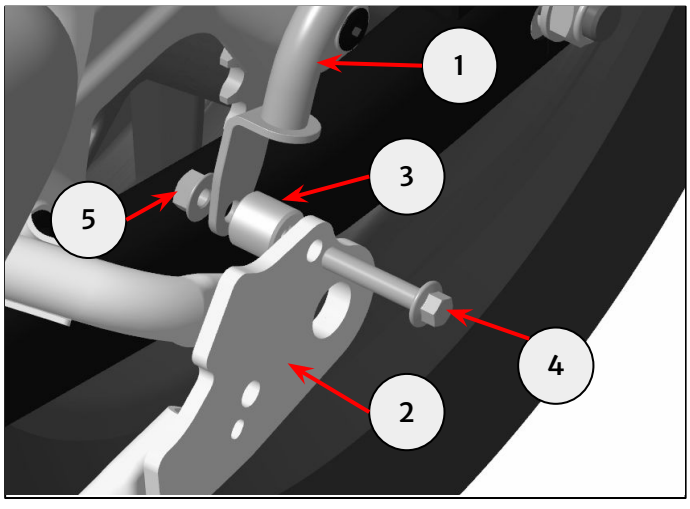

© 2025 Royal Enfield

Classic 650 Model Only – Right Hand Side

24 Remove the fixing (1) from the motorcycle frame (2) as shown. Retain the fixing (1) for reuse if the motorcycle is to be returned to its original condition.

	12mm socket and ratchet

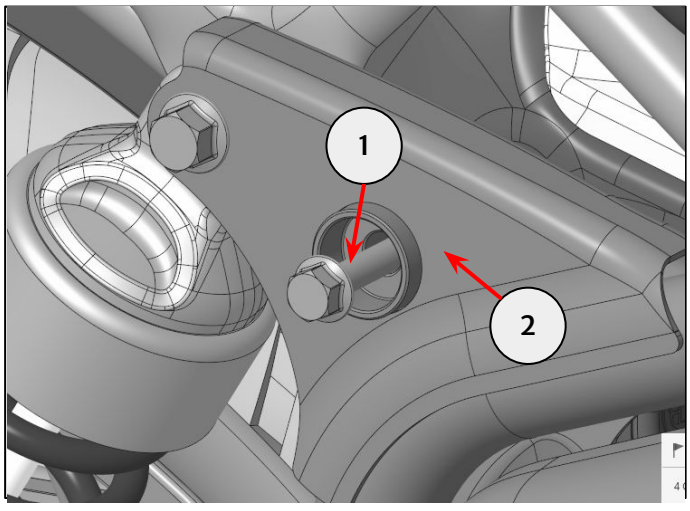

25 Fit a top hat spacer boss (1) from the kit into the recess in the motorcycle frame (2).

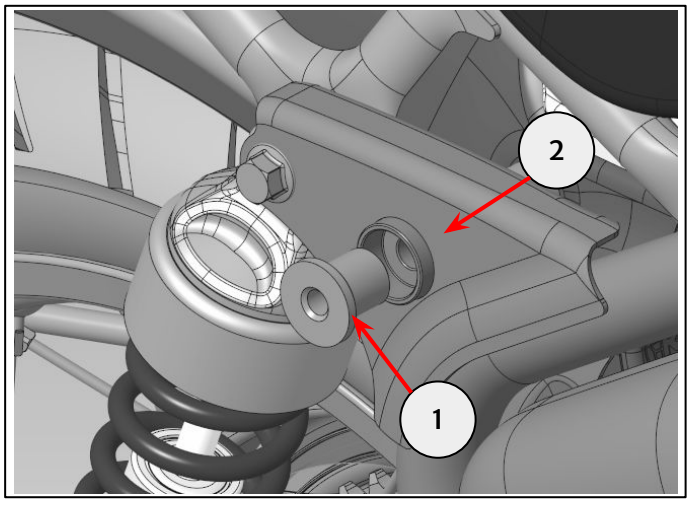

26 Fix the right hand pannier rail upper mount (1), to the top hat spacer boss (2) and motorcycle frame (3) using an M8 x 80mm fixing (4) from the kit, as shown.

Do not tighten the fixing at this stage.

	10mm socket and ratchet

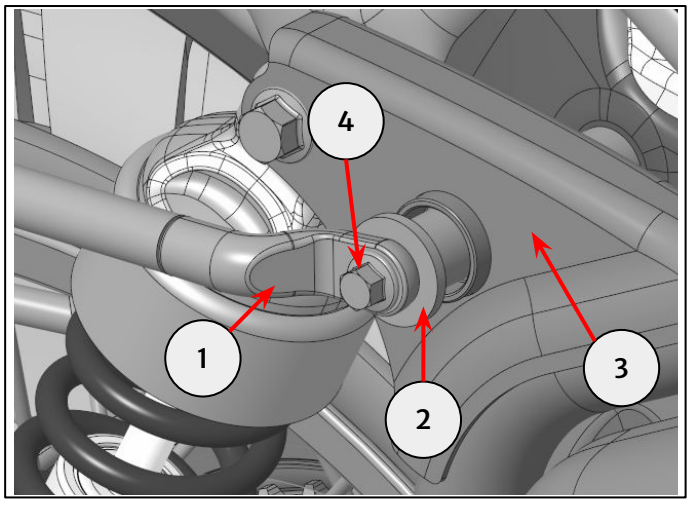

27 Remove the fixing (1) and nut (2) from the motorcycle frame (3) as shown. Retain the fixing (1) and nut (2) for reuse if the motorcycle is to be returned to its original condition.

	12mm socket and ratchet 12mm spanner

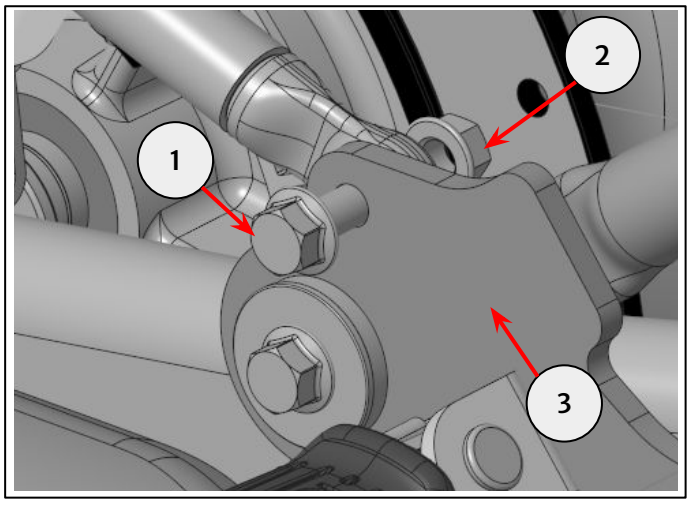

© 2025 Royal Enfield

28 Fix the right hand pannier rail lower mount (1) to the bracket on the motorcycle frame (2), and through the rear mounting frame (3), using an M8 x 30mm fixing (4), 3mm spacer (5) and M8 nut (6) from the kit, as shown.

Tighten the upper and lower pannier rail fixings to **30 Nm**.

Note: Rear wheel omitted from view for clarity

	10mm socket and torque wrench 13mm spanner

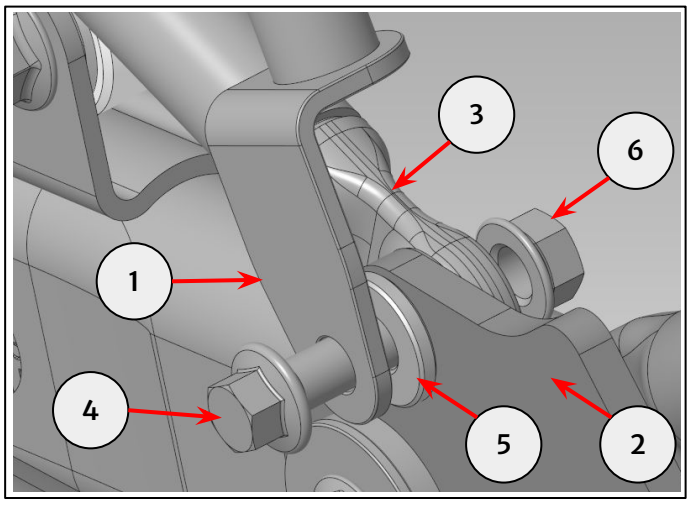

Classic 650 Model Only – Left hand side with Saree Guard

29 Remove the fixing (1) from the motorcycle frame (2) as shown. Retain the fixing (1) for reuse if the motorcycle is to be returned to its original condition.

	12mm socket and ratchet

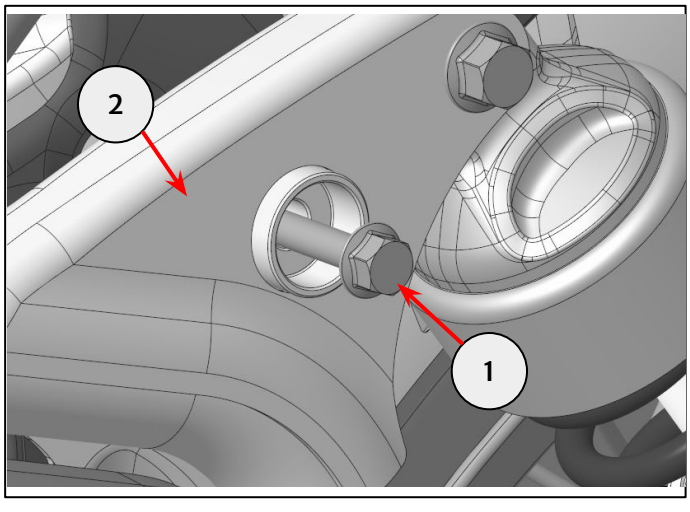

30 Fit a 55mm spacer boss (1) from the kit into the recess in the motorcycle frame (2).

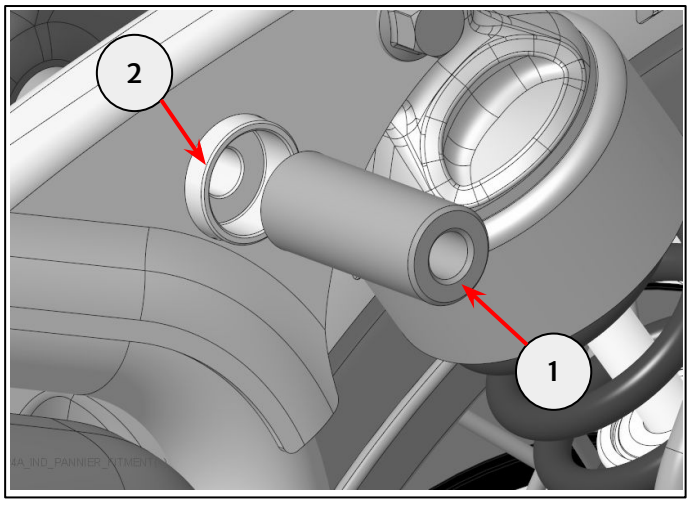

31 Fix the left hand pannier rail upper mount (1), to the 55mm spacer boss (2) and motorcycle frame (3) using an M8 x 105mm fixing (4) from the kit, as shown.

Do not tighten the fixing at this stage.

	10mm socket and ratchet

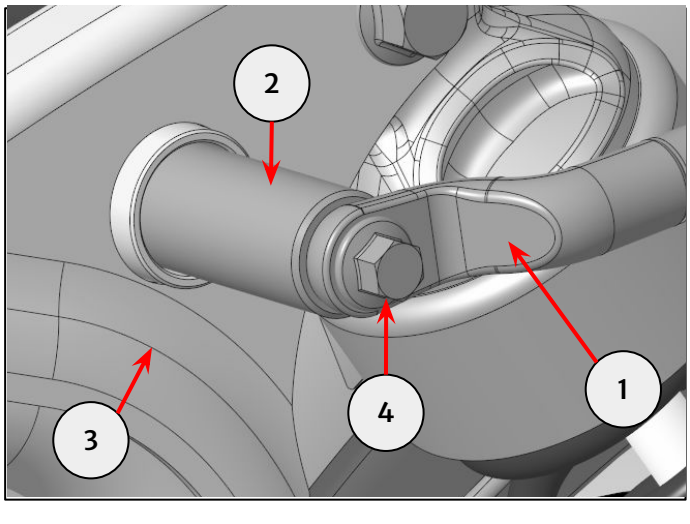

© 2025 Royal Enfield

32 Remove the fixing (1) and nut (2) from the motorcycle frame (3) as shown. Retain the fixing (1) and nut (2) for reuse if the motorcycle is to be returned to its original condition.

Note: Rear wheel omitted from view for clarity

	12mm socket and ratchet 12mm spanner

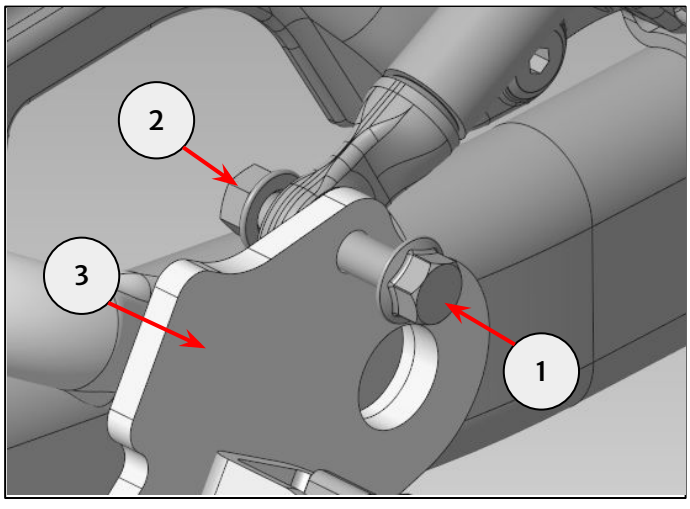

33 Fix the left hand pannier rail lower mount (1) to the bracket on the motorcycle frame (2) and through the rear mounting frame (3), using an M8 x 30mm fixing (4), a 3mm spacer boss (5) and M8 nut (6) from the kit, as shown.

Tighten the upper and lower pannier rail fixings to **30 Nm**.

	10mm socket and torque wrench 13mm spanner

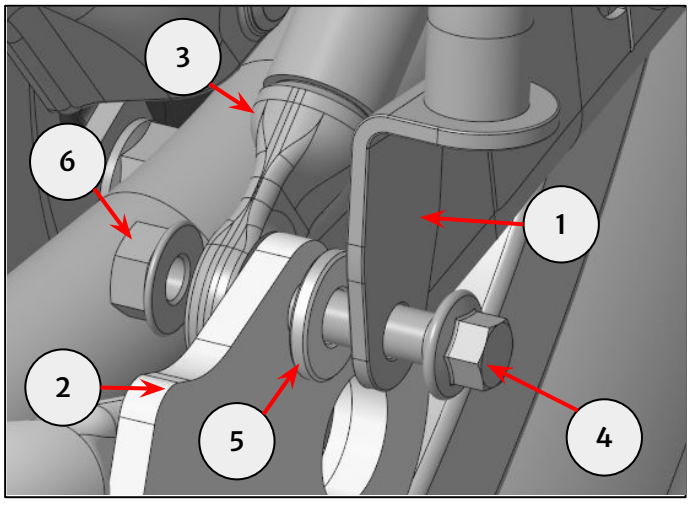

Classic 650 Model Only – Left hand side without Saree Guard

34 Remove the fixing (1) from the motorcycle frame (2) as shown. Retain the fixing (1) for reuse if the motorcycle is to be returned to its original condition.

	12mm socket and ratchet

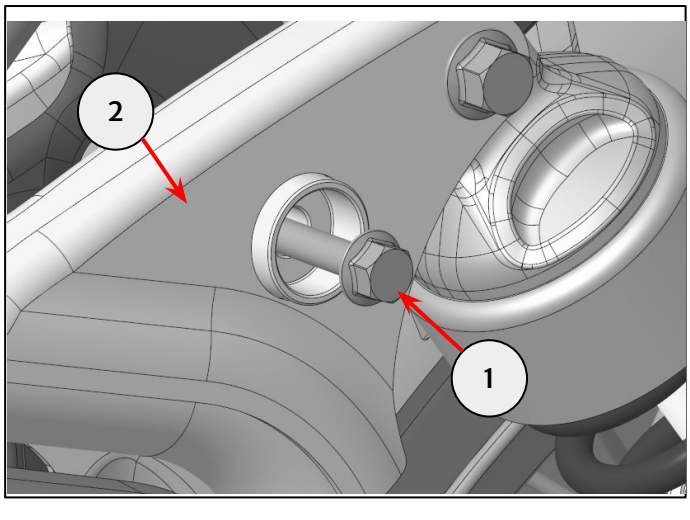

35 Fit a 24mm spacer boss (1) from the kit into the recess in the motorcycle frame (2).

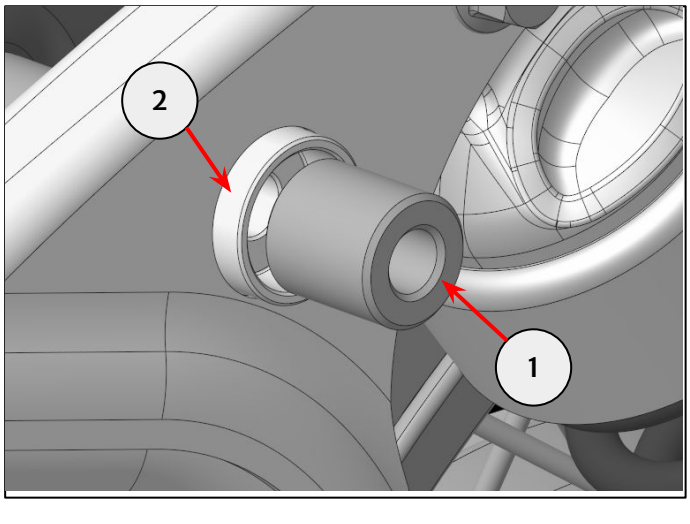

© 2025 Royal Enfield

36 Fix the left hand pannier rail upper mount (1), to the 24mm spacer boss (2) and motorcycle frame (3) using an M8 x 75mm fixing (4) from the kit, as shown.

Do not tighten the fixing at this stage.

	10mm socket and torque wrench

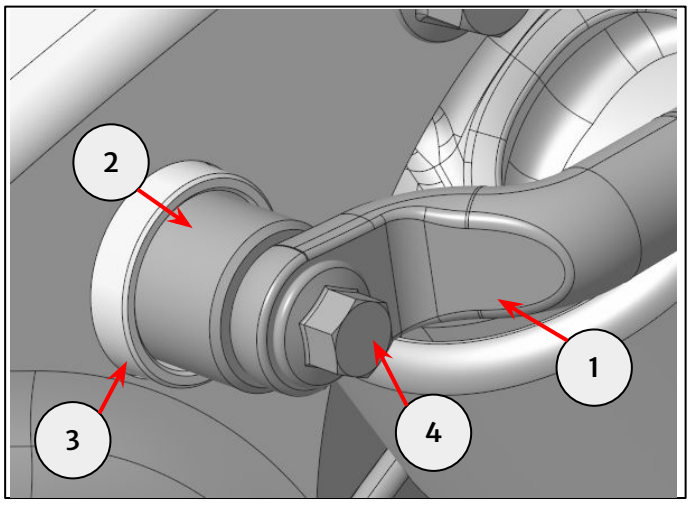

37 Remove the fixing (1) and nut (2) from the motorcycle frame (3) as shown. Retain the fixing (1) and nut (2) for reuse if the motorcycle is to be returned to its original condition.

Note: Rear wheel omitted from view for clarity.

	12mm socket and ratchet 12mm spanner

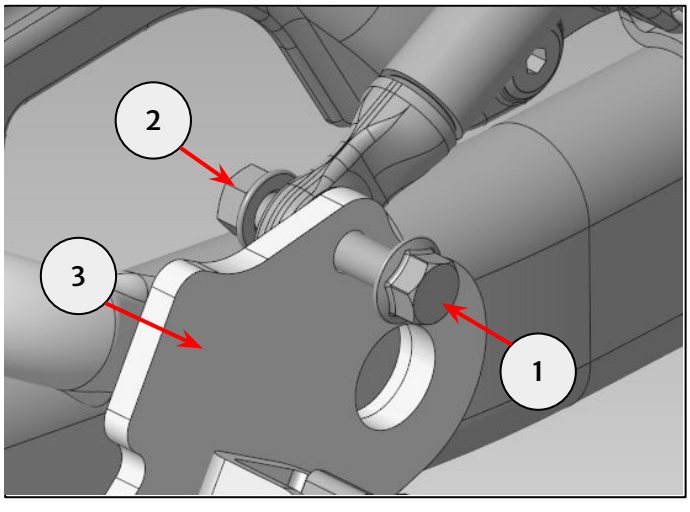

38 Fix the left hand pannier rail lower mount (1) to the bracket on the motorcycle frame (2) and through the rear mounting frame (3), using an M8 x 40mm fixing (4), a 9mm spacer boss (5) and an M8 nut (6) from the kit, as shown.

Tighten the upper and lower pannier rail fixings to **30 Nm**.

Note: Rear wheel omitted from view for clarity.

	10mm socket and torque wrench 13mm spanner

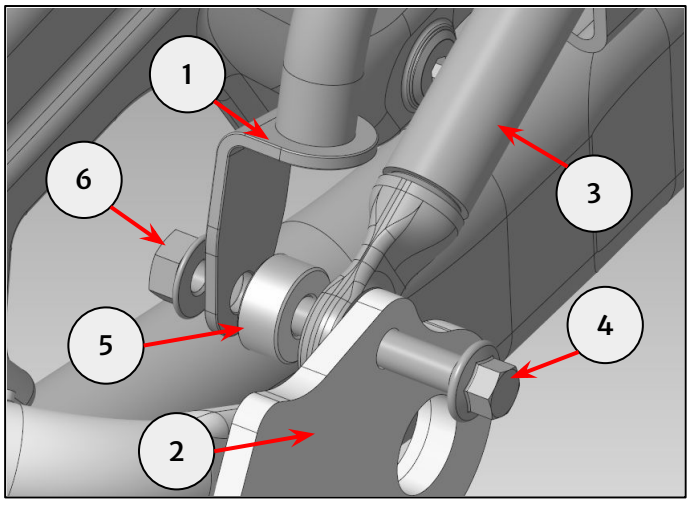

WARNING: After fitting any genuine Royal Enfield accessory always ride the motorcycle with caution and allow time to become familiar with any change in the motorcycle handling characteristics. Failure to become familiar with any change in the motorcycle handling characteristics may cause the motorcycle to become unstable and result in an accident.

© 2025 Royal Enfield