Accessory Fitting Instructions

Thank you for choosing this Triumph genuine accessory kit. This accessory kit is the product of Triumph's use of proven engineering, exhaustive testing, and continuous striving for superior reliability, safety and performance.

Completely read all of these instructions before commencing the installation of the accessory kit in order to become thoroughly familiar with the kit's features and the installation process.

These instructions should be considered a permanent part of your accessory kit, and should remain with it even if your accessory equipped motorcycle is subsequently sold.

Handlebar Brace Kit	
Black	
Kit Number	Models
A9638142	Street Scrambler, Scrambler 900 up to VIN CL5063
A9638147	Scrambler 1200 XE
A9638160	Scrambler 900 from VIN CM9964
Brown	
A9638144	Street Scrambler, Scrambler 900 up to VIN CL6204
A9638151	Scrambler 1200 XC, Scrambler 1200 X
A9638155	Scrambler 900 from VIN CM9964

© Triumph Designs Ltd. 2025

Parts supplied

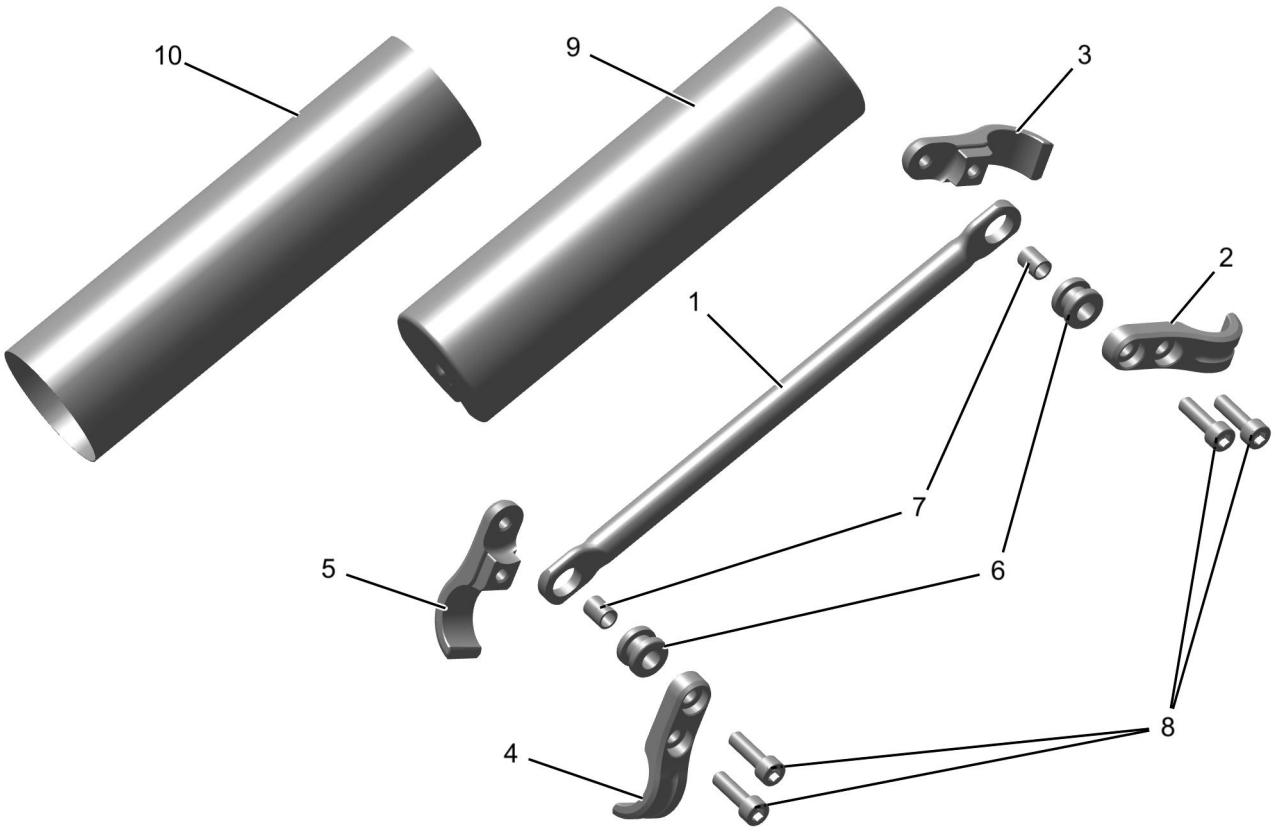

1. Bar, handlebar brace	1 off	6. Grommet	2 off
2. Clamp, front, left side	1 off	7. Spacer	2 off
3. Clamp, rear, left side	1 off	8. Fixing, M6 x 20 mm	4 off
4. Clamp, front, right side	1 off	9. Pad, handlebar brace	1 off
5. Clamp, rear, right side	1 off	10. Pad cover, handlebar brace	1 off

⚠ WARNING

Fit only genuine Triumph accessories to those models approved by Triumph as listed in the associated Triumph fitting instructions.

The accessory kits covered in this instruction are designed for use on specific models of Triumph motorcycle. The accessory kits and the models applicable are listed at the start of the instruction. They should never be fitted to any other Triumph model or to any other manufacturer's motorcycle.

Fitting an accessory kit to a Triumph model not listed, or to any other manufacturer's motorcycle, will affect the performance, stability and handling of the motorcycle.

Failure to follow the advice above may lead to loss of motorcycle control which could result in serious injury or death.

⚠ WARNING

Always have Triumph approved parts, accessories and conversions fitted by a competent person with the specialist knowledge and technical understanding of motorcycles, such as an authorised Triumph dealer.

The fitment of parts, accessories and conversions by a person without the specialist knowledge and technical understanding of motorcycles may affect the handling, stability or other aspects of the motorcycle's operation.

Failure to follow the advice above may lead to loss of motorcycle control which could result in serious injury or death.

⚠ WARNING

A torque wrench of known accurate calibration must be used when fitting this accessory kit.

Failure to tighten any of the fasteners to the correct torque specification may affect motorcycle performance, handling and stability.

Failure to follow the advice above may lead to loss of motorcycle control which could result in serious injury or death.

⚠ WARNING

Make sure the motorcycle is stabilised and adequately supported.

Do not support the motorcycle on any ancillary component, the exhaust system or any other non structural parts of the motorcycle frame.

A correctly supported motorcycle will help prevent it from falling.

An unstable motorcycle may fall resulting in motorcycle damage, serious injury or death.

NOTICE

Triumph offers a broad range of approved genuine accessories for your motorcycle.

We cannot therefore cover all possible equipment variations in these instructions. For removal and installation of Triumph Genuine Accessories, always refer to the instructions supplied with the respective accessory kit.

To obtain additional copies of any Triumph accessory instructions, visit www.triumphinstructions.com or contact your authorised Triumph dealer.

NOTICE

The Scrambler 1200 XE is shown in the illustrations below, but the fitment is the same for all models.

1. Collect the handlebar brace bar, grommets and spacers from the kit.
2. Fit the grommets into the holes at both ends of the handlebar brace bar.

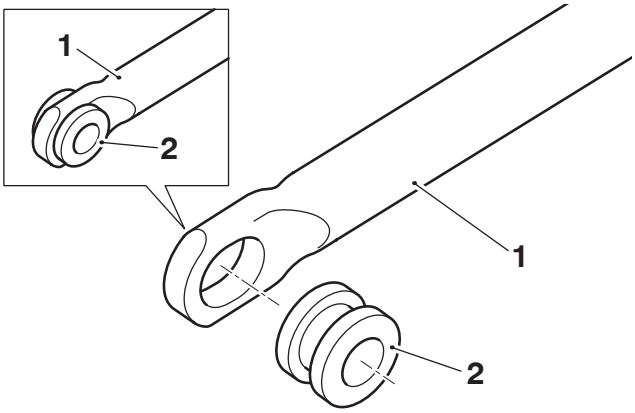

1. **Handlebar brace bar**
2. **Grommet**

3. Fit the spacers into the grommets at both ends of the handlebar brace bar.

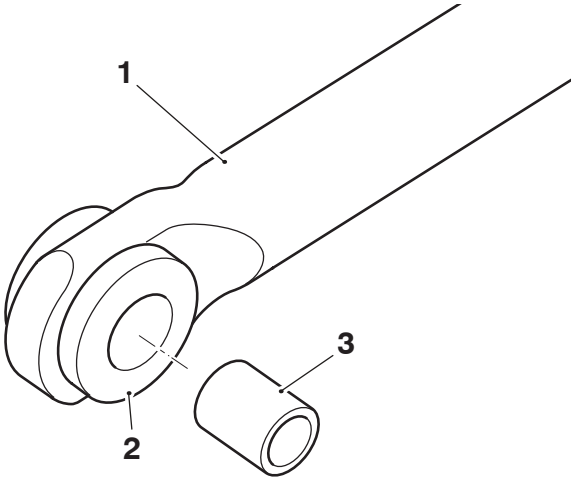

1. **Handlebar brace bar**
2. **Grommet**
3. **Spacer**

4. Fit the front and rear right side clamps around the right side of the handlebar. Make sure the dot recess on the clamps are positioned at the bottom, as shown in the illustration below.
5. Secure the clamp with one of the M6 x 20 mm fixings, do not fully tighten at this stage
6. Fit the handlebar brace bar to the clamp and secure with one of the M6 x 20 mm fixings. Do not fully tighten at this stage.

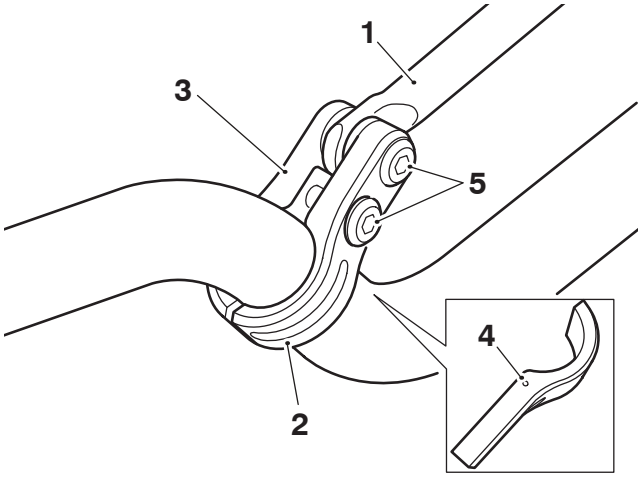

1. **Handlebar brace bar**
2. **Clamp, front right hand**
3. **Clamp, rear right hand**
4. **Dot recess**
5. **Fixings, M6 x 20 mm**

7. Repeat steps 4 to 6 for the left side clamp.
8. Position the handlebar brace assembly so there is equal distance from the handlebar to the handlebar brace bar at both sides, as shown in the illustration below.
9. Tighten the two lower M6 x 20 mm fixings to 9 Nm.

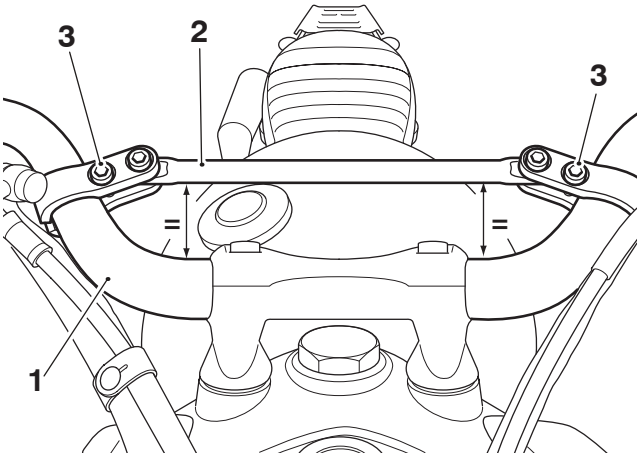

1. **Handlebar**
2. **Handlebar brace bar**
3. **Lower fixings, M6 x 20 mm**

10. Secure the handlebar brace bar to the clamp by tightening the remaining two M6 x 20 mm fixings to 9 Nm.

Handlebar Brace Pad

11. Fit the handlebar brace pad onto the handlebar brace bar, as shown in the illustration below.

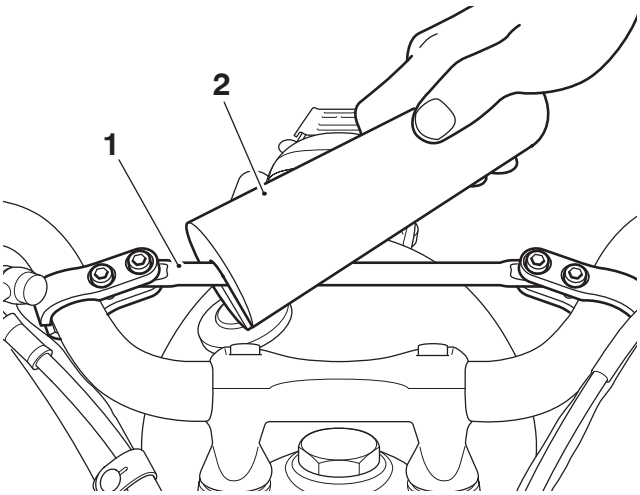

1. **Handlebar brace bar**
2. **Handlebar brace pad**

12. Wrap the pad cover around the handlebar brace pad, making sure the hook and loop section of the cover is positioned towards the rear of the handlebars, as shown in the illustration below.

13. Apply firm pressure to the hook and loop sections of the pad cover to secure it to the brace pad.

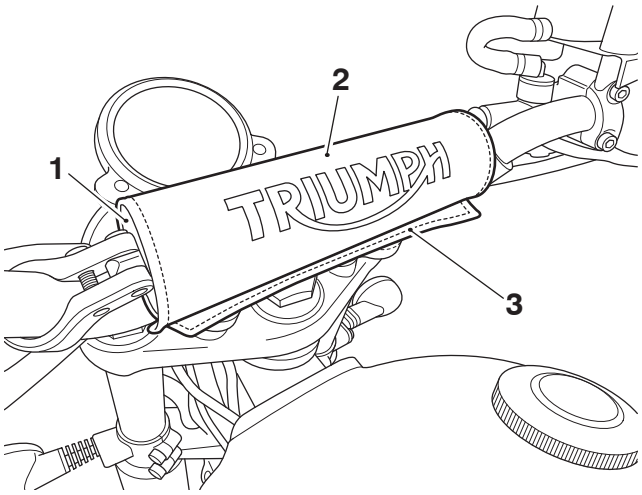

1. **Handlebar brace pad**
2. **Pad cover**
3. **Hook and loop sections**

⚠ WARNING

After fitting the accessory kit, the motorcycle will exhibit new handling characteristics.

Operate the motorcycle in a safe area free from traffic to gain familiarity with any new characteristics.

Operation of the motorcycle when not familiar with any new handling characteristics may lead to loss of motorcycle control which could result in serious injury or death.

⚠ WARNING

If, after fitting this accessory kit, you have any doubt about the performance of any aspect of the motorcycle, contact a competent person with the specialist knowledge and technical understanding of motorcycles, such as an authorised Triumph dealer.

Riding a motorcycle when there is any doubt as to any aspect of the performance of the motorcycle may lead to loss of motorcycle control which could result in serious injury or death.

⚠ WARNING

Never ride an accessory-equipped motorcycle at speeds above 80 mph (130 km/h).

Remember that the 80 mph (130 km/h) limit will be reduced by the fitting of non-approved accessories, incorrect loading, worn tyres, overall motorcycle condition and poor road or weather conditions.

The presence of accessories will cause changes in the stability and handling of the motorcycle. Failure to allow for changes in motorcycle stability may lead to loss of motorcycle control which could result in serious injury or death.

⚠ WARNING

High-speed operation should only be attempted by riders who have been instructed in the techniques necessary for high-speed riding and are familiar with the motorcycle's characteristics in all conditions.

Only operate this Triumph motorcycle at high speed in closed-course, on-road competition or on closed-course racetracks.

High-speed operation in any other circumstances is dangerous and may lead to loss of motorcycle control which could result in serious injury or death.

NOTICE

The motorcycle must not be operated above the legal road speed limit except in closed-course conditions.